REV.	DESCRIPTION	DATE	APPROVED

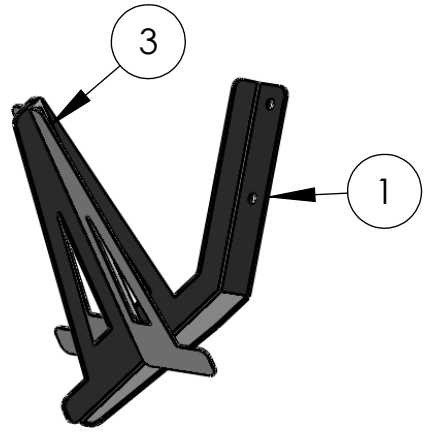

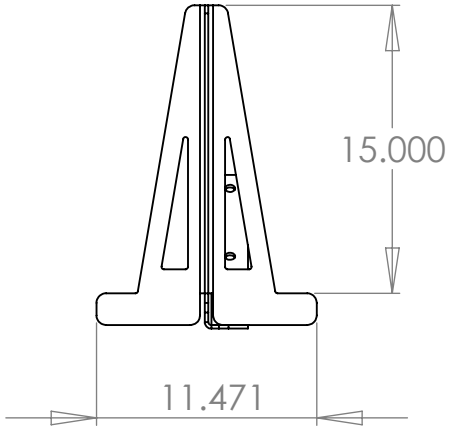

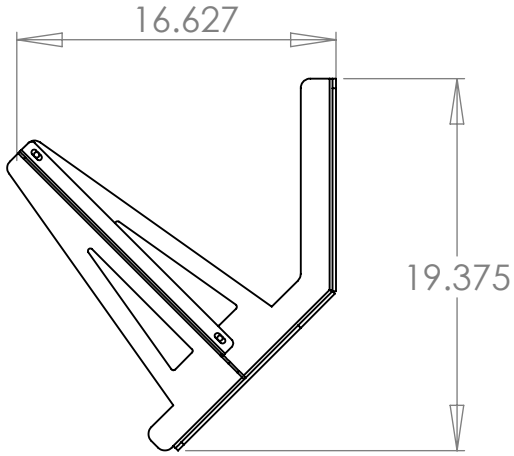

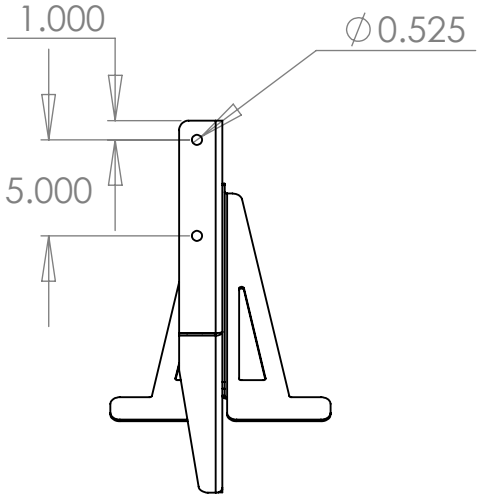

ITEM NO.	PART NUMBER	DESCRIPTION	QTY.
1	ITD6167	Carrier Cone Mount Center Support	1
2	ITD6168	Carrier Cone Mount Support	2
3	ITD6168 Mirror		1

DRAWN BY: KBH DRAWN DATE: 12/23/2010

UNLESS OTHERWISE SPECIFIED:

DIMENSIONS ARE IN INCHES
TOLERANCES:
FRACTIONAL ± 1/16"
ANGULAR: MACH ± 0.25° BEND ± 1.5°
TWO PLACE DECIMAL ± 0.020"
THREE PLACE DECIMAL ± 0.005"

MATERIAL: See BOM

DO NOT SCALE DRAWING

Inventive LLC
In The Ditch Towing Products

PART NAME
Carrier Cone Mount

SIZE A PART NO. ITD1259

SHEET SCALE 1:10 SHEET 1 of 1

5 4 3 2 1