DIMENSIONS

A	28.00”
B	1.875”
C	1.25” DIAMETER
D	3.75”
E	
F	
G	
H	
I	.625”
J	13.875”
K	.13” WALL THICKNESS
L	.14” WALL THICKNESS
M	10.24”

CONE SIZE	BASE WEIGHT	TOTAL WEIGHT
28”		7.26 lbs

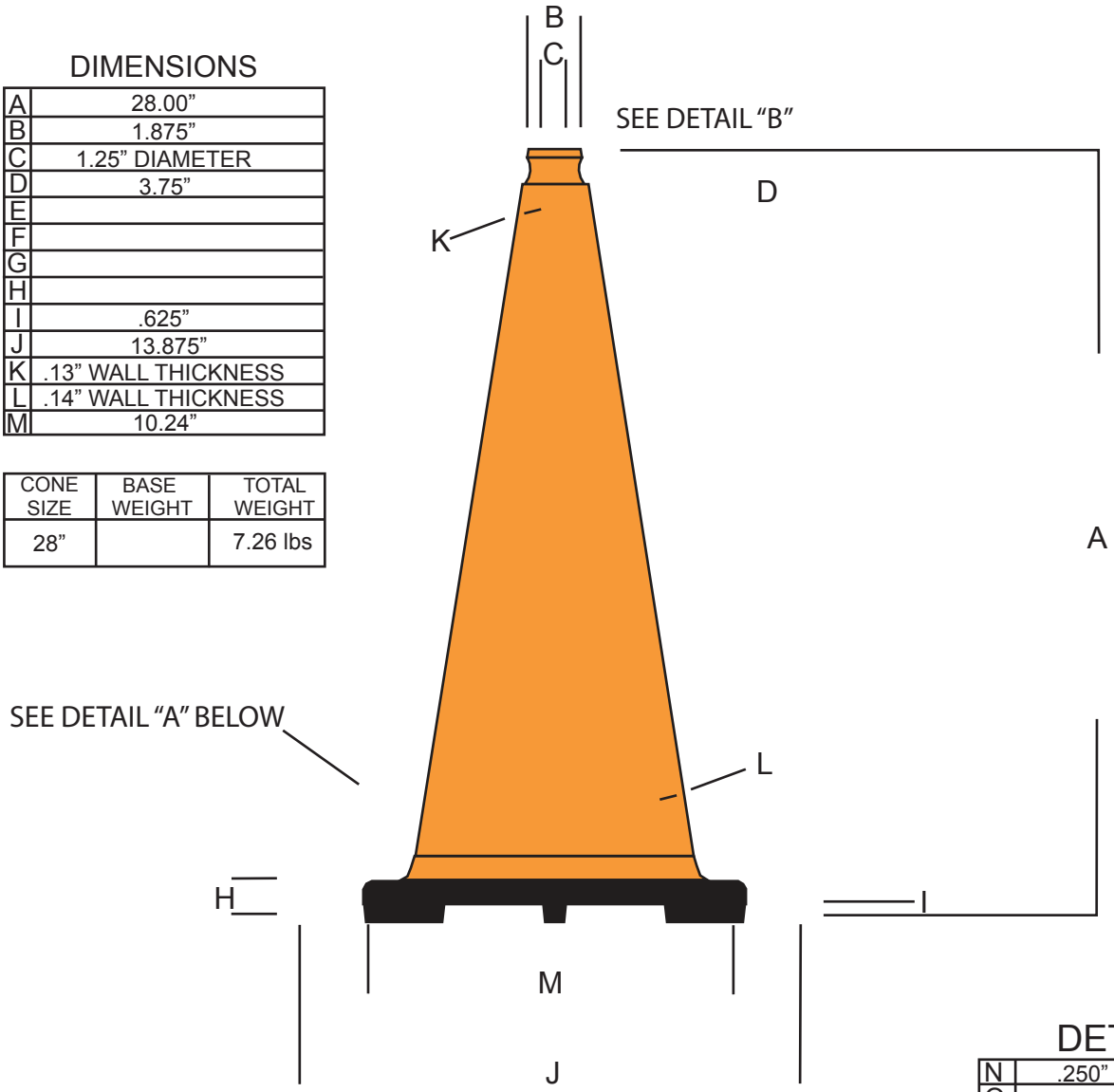

DETAIL “B”

N	.250” RECESS
O	.3125”
P	.75”

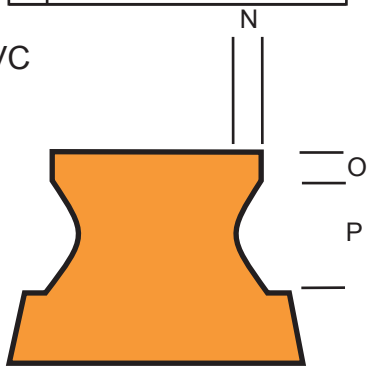

Notes:

Conical section manufactured from 100% recyclable flourescent orange PVC

Conical section also avaliable in 100% recyclable flourescent yellow - green PVC

Base manufactured form 100% post industrial recycled black PVC

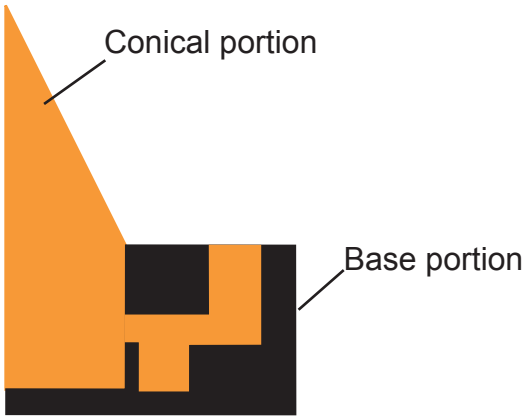

Circle Interlock System

DETAIL “A”

28” TRAFFIC CONE WIDE BODY RS70032C

jbc™ working together

JBC SAFETY PLASTIC INC.
16750 CHESTNUT ST
CITY OF INDUSTRY CA 91748
www.jbcsafety.com

Date 5/30/13	REVOLUTION SERIES	DWG. NO.	RS70032C